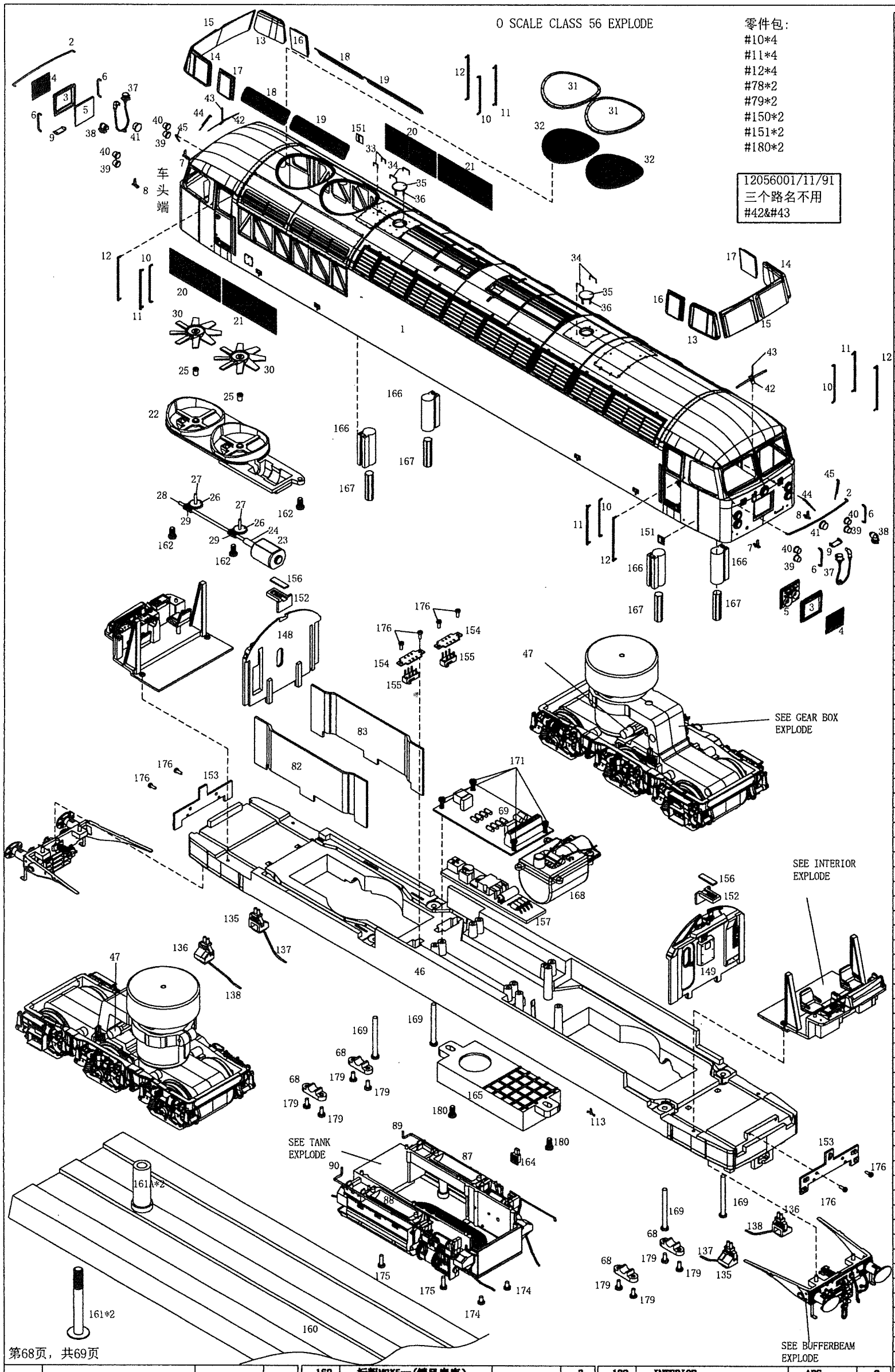

113	SMALL VALVE BOT CHAS BY CO	ABS	1
112	PIPE FROM COM TO U CHASSIS	ABS	1
111	FIRE BOX	ABS	1
110	SANDBOX BY COMPRESSOR B	ABS	1
109	SANDBOX BY COMPRESSOR F	ABS	1
108	SMALL PIPE FROM COMPRESSOR B	ABS	1
107	LARGE LONG PIPE BACK	ABS	1
106	SMALL PIPE FROM COMPRESSOR	ABS	1
105	LARGE LONG PIPE	ABS	1
104	SMALL TANK OVER COMPPRES B	ABS	2
103	SMALL TANK OVER COMPRES	ABS	2
102	COMPRESSOR BACK	ABS	2
101	COMPRESSOR 1	ABS	2
100A	FUEL PIPE	ABS	2
100	BACK CENTER BOX	ABS	1
99	SMALL SIDE TANK BOX SHORT R	ABS	1
98	SMALL SIDE TANK BOX SHORT	ABS	1
96&97	ST-D909	WIRE	2
94&95	ST-D908	WIRE	2
93	SMALL SIDE TANK BATTERYBOX	ABS	1
92	BOX ON BATTERY BOX R	ABS	1
91	BOX ON BATTERY BOX	ABS	1
90	TANK PIPE R	ABS	1
89	TANK PIPE	ABS	1
88	UNDERFRAME TANK 1 R	ABS	1
87	UNDERFRAME TANK 1	ABS	1
86	BATTERYBOX BOTTOM	ABS	1
85	BATTERYBOX R	ABS	1
84	BATTERYBOX	ABS	1
83	BACK PLATE SIDE GRILL R	ABS	1
82	BACK PLATE SIDE GRILL	ABS	1
81	AIR CONTROL PIPE LEFT	POM	4
80	AIR PIPE CL 56	POM	4
79	BUFFERBEAM_GRID	ABS	2
78	LW-D907	ED BRASS	6
77	AIR_BRAKE_PIPE_LEFT	POM	2
76	65035805连钩组件		2
75	COUPLER SOCKET	POM	2
74	ST-9160 压簧 2.08X3.6mm		4
73	YL-A903 Ø1.5X12.2mm铁钉		4
72	BUFFER CLASS 56	ABS	4
71	BUFFER SHANK	ABS	4
70	BUFFERBEAM	ABS	2
69	PCB:主线路板		1
68	SUSPENTIONBRIDGE_RETAINER	POM	4
67	TF-8338	磷铜线	2
66	TF-8270	磷铜线	2
65	POWER_PICKUP_RETAINER_R	POM	2
64	POWER_PICKUP_RETAINER_L	POM	2
63	CM-8211轴承	BRASS	8
62	WHEEL INSULATOR	POM	12
61	CM-9633 Ø3.0X37.2mm不锈钢轴	STEEL	6
60	CM-8268铜轴(电仓黑)	BRASS	12
59	18T齿轮0.5X18TX4.3LX2.9	POM	4
58	20T齿轮0.5x20Tx16ZX2.13Lx2.9	POM	4
57B	20T塑胶齿轮M0.5X20TX5HX2.9	POM	2
57A	24T齿轮 0.5x24Tx5Lx2.9mm	POM	2
57	0.5X16TX5LX2.9[8.9-9.0mm标准]	POM	6
56	0.5X14TX5X2.9[7.9-8.0mm]	POM	4
55	YL-A902 Ø2.8X16.0mm不锈钢轴	STEEL	4
54	CM-8269不锈钢轴	STEEL	14
53	YL-A901 Ø39.7X14.0mm铜飞轮	BRASS	2
52	YL-C31009.45X11.0mm铜螺罗牙	BRASS	2
51	QX-RS-385SH-2275W-62		1
50	GEARBOX BOTTOM	Die-cast	2
49	GEARBOX CL40 R	Die-cast	2
48	GEARBOX CL40	Die-cast	2
47	SUSPENTION BRIDGE O SCALE	POM	2
46	CHASSIS CLASS 56	Die-cast	1
45	WIPER R	POM	2
44	WIPER L	POM	2
43	ST-D906	WIRE	2
42	LW-D904	ED BRASS	2
41	LIGHTGUIDE CENTER HEADLIGHT	GP	2
40	LIGHTGUIDE RED	GP	4
39	LIGHTGUIDE WHITE	GP	4
38	MU RECEPTABLE	ABS	2
37	MW CABLES	ABS	2
36	LW-D903	ED BRASS	2
35	EXHAUST TOP	Die-cast	2
34	TF-D902	WIRE	4
33	TF-D901	WIRE	2
32	LW-D900	ED BRASS	2
31	FRAME ROOF GRILL ROUND	ABS	2
30	ROOF FAN CL56	ABS	2
29	YL-B466 铜螺萝牙	brass	2
28	YL-D915	steel	1
27	CM-8209不锈钢轴	steel	2
26	齿轮0.3X24TX1.25LX1.25	Std	2
25	YL-D954	BRASS	2
24	3.0X0.8mm硅胶管 (自锁10mm)		1
23	QX-FF-N20-08220		1
22	ROOF FAN MOUNT CL56	ABS	1
21	LW-D899	ED BRASS	2
20	LW-D898	ED BRASS	2
19	LW-D897	ED BRASS	2
18	LW-D896	ED BRASS	2
17	CAB DOOR WINDOW R	GP	2
16	CAB DOOR WINDOW L	GP	2
15	FRONT WINDOW	GP	2
14	CAB SIDE WINDOW R	GP	2
13	CAB SIDE WINDOW L	GP	2
12	CAB DOOR L HANDRAIL	Die-cast	4
11	CAB DOOR S HANDRAIL	Die-cast	4
10	TF-D895	WIRE	4
9	LW-D894	ED BRASS	2
8	FRONT LAMP BRACKETR	ABS	2
7	FRONT LAMP BRACKET	ABS	2
6	TF-D893	WIRE	4
5	HORNS	ABS	2
4	LW-D892	ED BRASS	2
3	HORN GRILL	ABS	2
2	ST-D891	WIRE	2
1	BODY	ABS	1

180	大幼M2.2X10mm（锁喇叭盒）		2
179	标幼M1.8X3（牙箱压块）（内座）		12
178	标幼M1.7X5mm（雪铲）		4
176	标幼M1.4X3mm（开关板，灯板）		8
175	标粗M1.9X6.0mm（气缸）		2
174	标粗M1.9X3mm（气缸）		2
173	标粗M2.2X3.5mm[电线耳用]		4
172	大幼尖脚M1.9X7（左、右牙箱）		8
171	标幼M1.9x4mm（牙箱盖 ）		12
170	10012-6圆头电线耳	BRASS	4
169	M2.4x22.5标幼（锁车身）		4
168	PCB:客供烟囱		1
167	YL-C317 铜螺母	BRASS	4
166	MOUNTING POST	POM	4
165	PCB: 喇叭		1
164	FIRE BOX 2_1	ABS	1
163	BODY STRUCTURE	ABS	4

162	标粗M2X5mm(锁风扇座)		3
161A	DISTANCE PIECE CL56	POM	2
161	M5X42木板螺丝		2
160	木板		1
157	PCB:车顶风扇控制板		1
156	PCB:驾驶室灯板		2
155	PCB:开关		2
154	PCB:开关板		2
153	PCB:灯板		2
152	CAB LIGHT HOLDER	ABS	2
151	LW-D914	ED BRASS	2
150	FIRE EXTINGUISHER	ABS	2
149	BACKWALL END NO.2 CL56	ABS	1
148	BACKWALL END NO.1 CL56	ABS	1
147	DRIVERS SEAT CL 56	ABS	4
146	PHONE STAND CL 56	ABS	2
145	COOKER END CL 56	ABS	2
144	INTERIOR HANDLE SHORT	ABS	2
143	LONG HANDLE INTERIOR CL 56	ABS	2
142	INTERIOR HANDLE 3	ABS	2
141	INTERIOR HANDLE 2	ABS	2
140	INTERIOR DESK	ABS	2

139	INTERIOR	ABS	2
137&138	ST-D913	WIRE	4
136	SANDBOX END L	ABS	2
135	SANDBOX END R	ABS	2
132	ST-D912	WIRE	2
131	BOGIE STEP L	ABS	2
130	BOGIE LEFT	ABS	2
129	BRAKE BLOCK RIGHT	ABS	12
128	BRAKE BLOCK LEFT	ABS	12
127	BOGIE FRONT BEAM	ABS	2
126	BOGIE BACK BEAM	ABS	2
125	BOGIE STEP R	ABS	2
124	SMALL CYLINDER CENTER BOGIE	ABS	4
122&123&133&134	ST-D911	WIRE	8
121	ST-D910	WIRE	2
120	BOGIE CLINDER CENETER L	ABS	4
119	BOGIE CYLINDER CENTER PIECE	ABS	2
118	BOGIE CYLINDER L	ABS	8
117	BOGIE CYLINDER R	ABS	12
116	BOGIE AXLEBOX W SPRING B	ABS	12
115	BOGIE AXLEBOX W SPRING	ABS	12
114	BOGIE RIGHT	ABS	2

O SCALE CLASS 56 GEARBOX EXPLODE

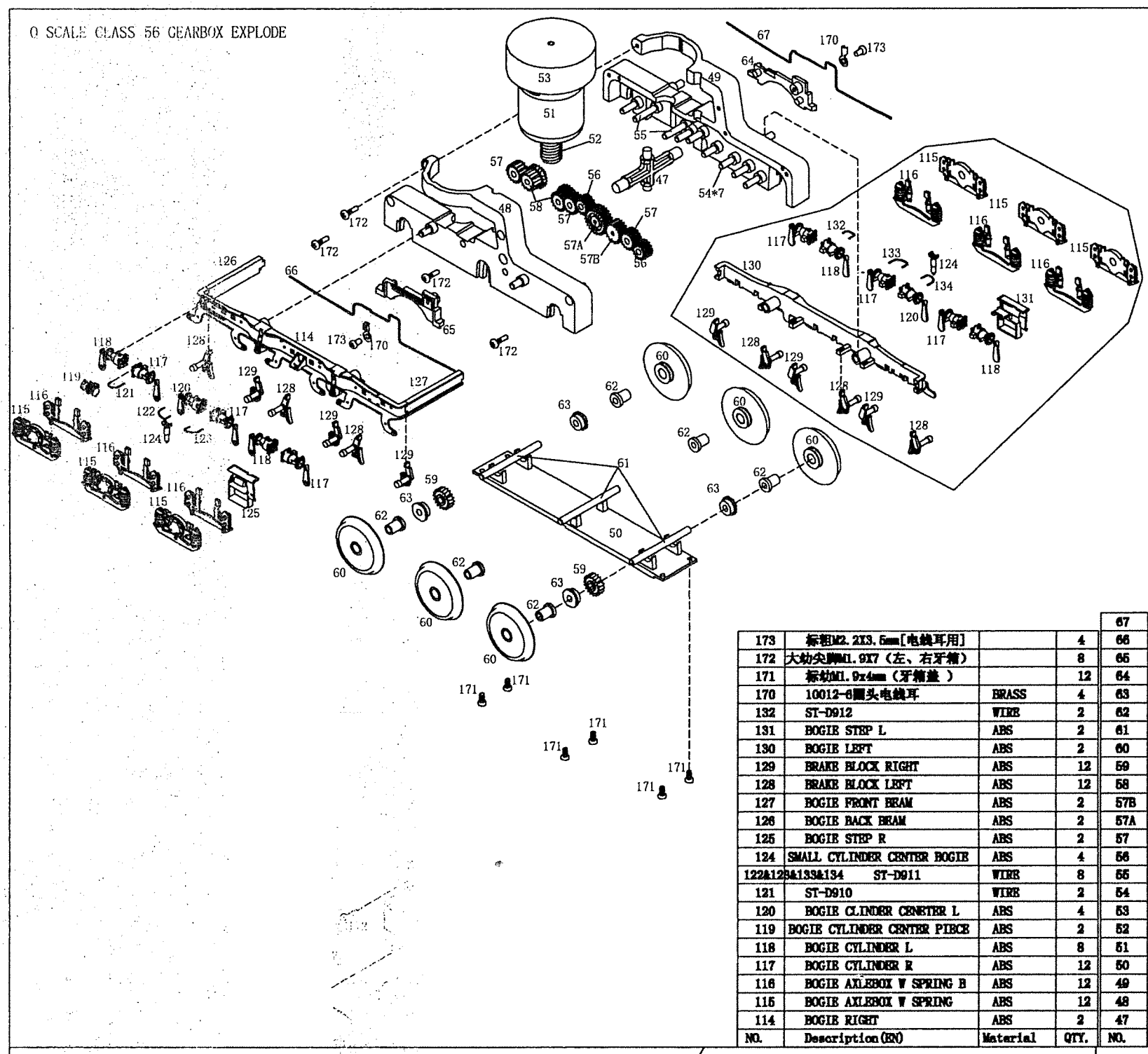

NO.	Description(EN)	Material	QTY.
173	标粗M2.2X3.5mm[电线耳用]		4
172	大幼尖脚M1.9X7（左、右牙箱）		8
171	标幼M1.9x4mm（牙箱盖 ）		12
170	10012-6圆头电线耳	BRASS	4
132	ST-D912	WIRE	2
131	BOGIE STEP L	ABS	2
130	BOGIE LEFT	ABS	2
129	BRAKE BLOCK RIGHT	ABS	12
128	BRAKE BLOCK LEFT	ABS	12
127	BOGIE FRONT BEAM	ABS	2
126	BOGIE BACK BEAM	ABS	2
125	BOGIE STEP R	ABS	2
124	SMALL CYLINDER CENTER BOGIE	ABS	4
122&123&133&134	ST-D911	WIRE	8
121	ST-D910	WIRE	2
120	BOGIE CLINDER CENETER L	ABS	4
119	BOGIE CYLINDER CENTER PIECE	ABS	2
118	BOGIE CYLINDER L	ABS	8
117	BOGIE CYLINDER R	ABS	12
116	BOGIE AXLEBOX W SPRING B	ABS	12
115	BOGIE AXLEBOX W SPRING	ABS	12
114	BOGIE RIGHT	ABS	2

NO.	Description(EN)	Material	QTY.
67	TP-8338	磷铜线	2
66	TP-8270	磷铜线	2
65	POWER_PICKUP_RETAINER_R	POM	2
64	POWER_PICKUP_RETAINER_L	POM	2
63	CM-8211轴承	BRASS	8
62	WHEEL INSULATOR	POM	12
61	CM-9633 Ø3.0X37.2mm不锈钢轴	STEEL	6
60	CM-8268铜轴(电仓黑)	BRASS	12
59	18T齿轮0.5X18TX4.3LX2.9	POM	4
58	20T齿轮0.5x20Tx16ZX2.13Lx2.9	POM	4
57B	20T圆胶齿轮M0.5X20TX5HX2.9	POM	2
57A	24T齿轮 0.5x24Tx5Lx2.9mm	POM	2
57	0.5X16TX5LX2.9[8.9-9.0mm标准]	POM	6
56	0.5X14TX5X2.9[7.9-8.0mm]	POM	4
55	YL-A902 Ø2.8X16.0mm不锈钢轴	STEEL	4
54	CM-8269不锈钢轴	STEEL	14
53	YL-A901 Ø39.7X14.0mm铜飞轮	BRASS	2
52	YL-C31069.45X11.0mm铜丝罗牙	BRASS	2
51	QX-RS-385SH-2275W-62		1
50	GEARBOX BOTTOM	Die-cast	2
49	GEARBOX CL40 R	Die-cast	2
48	GEARBOX CL40	Die-cast	2
47	SUSPENTION BRIDGE O SCALE	POM	2

O SCALE CLASS 56 TANK EXPLODE

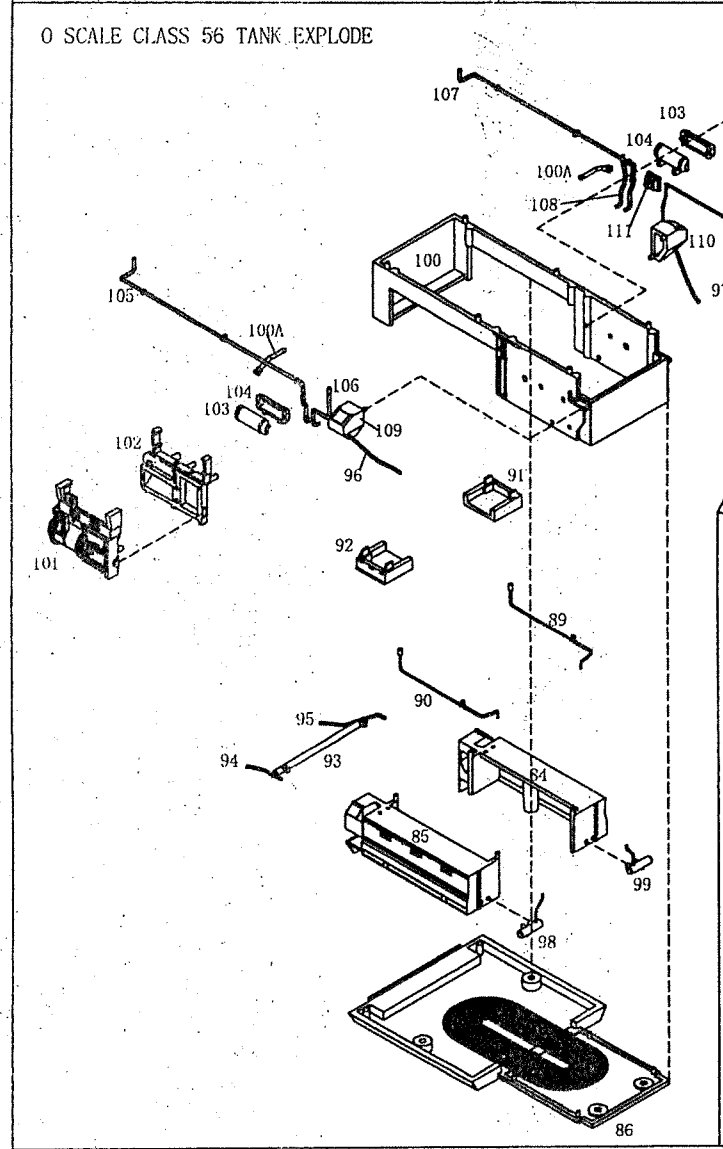

O SCALE CLASS 56 INTERIOR EXPLODE

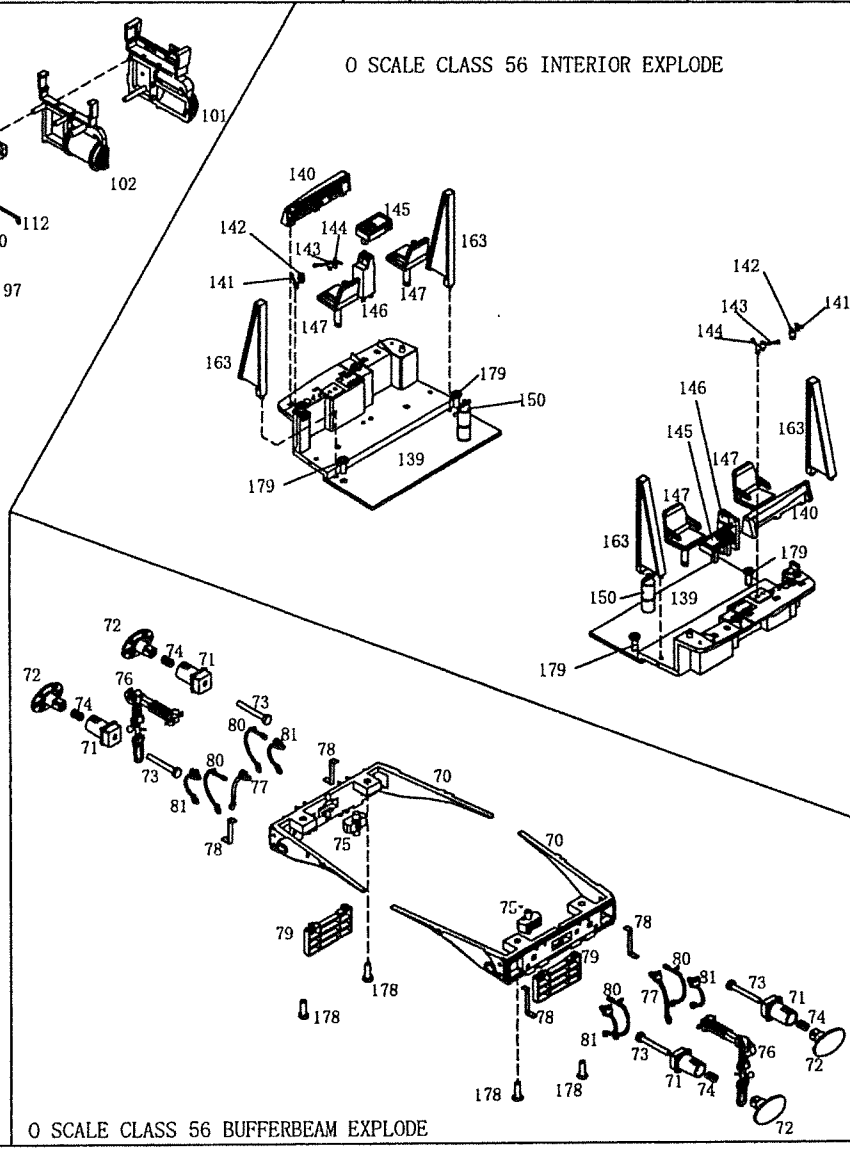

O SCALE CLASS 56 BUFFERBEAM EXPLODE

NO.	Description(EN)	Material	QTY.
150	FIRE EXTINGUISHER	ABS	2
147	DRIVERS SEAT CL 56	ABS	4
146	PHONE STAND CL 56	ABS	2
145	COOKER END CL 56	ABS	2
144	INTERIOR HANDLE SHORT	ABS	2
143	LONG HANDLE INTERIOR CL 56	ABS	2
142	INTERIOR HANDLE 3	ABS	2
141	INTERIOR HANDLE 2	ABS	2
140	INTERIOR DESK	ABS	2
112	PIPE FROM COM TO U CHASSIS	ABS	1
111	FIRE BOX	ABS	1
110	SANDBOX BY COMPRESSOR B	ABS	1
109	SANDBOX BY COMPRESSOR F	ABS	1
108	SMALL PIPE FROM COMPRESSOR B	ABS	1
107	LARGE LONG PIPE BACK	ABS	1
106	SMALL PIPE FROM COMPRESSOR	ABS	1
105	LARGE LONG PIPE	ABS	1
104	SMALL TANK OVER COMPRES B	ABS	2
103	SMALL TANK OVER COMPRES	ABS	2
102	COMPRESSOR BACK	ABS	2
101	COMPRESSOR 1	ABS	2
100A	FUEL PIPE	ABS	2
100	BACK CENTER BOX	ABS	1
99	SMALL SIDE TANK BOX SHORT R	ABS	1
98	SMALL SIDE TANK BOX SHORT	ABS	1
96&97	ST-D909	WIRE	2
94&95	ST-D908	WIRE	2
93	SMALL SIDE TANK BATTERYBOX	ABS	1
92	BOX ON BATTERY BOX R	ABS	1
91	BOX ON BATTERY BOX	ABS	1
90	TANK PIPE R	ABS	1
89	TANK PIPE	ABS	1
86	BATTERYBOX BOTTOM	ABS	1
85	BATTERYBOX R	ABS	1
84	BATTERYBOX	ABS	1
81	AIR CONTROL PIPE LEFT	POM	4
80	AIR PIPE CL 56	POM	4
79	BUFFERBEAM_GRID	ABS	2
78	LW-D907	ED BRASS	6
77	AIR_BRAKE_PIPE_LEFT	POM	2
76	65035805连钩组件		2
75	COUPLER SOCKET	POM	2
74	ST-9160 压簧 2.0X3.6mm		4
73	YL-A903 Ø1.5X12.2mm铁钉		4
72	BUFFER CLASS 56	ABS	4
71	BUFFER SHANK	ABS	4
70	BUFFERBEAM	ABS	2

NO.	Description(EN)	Material	QTY.
179	标幼M1.8X3（牙箱压块）（内座）		12
178	标幼M1.7X5mm（置铲）		4
163	BODY STRUCTURE	ABS	4